9572321

TOLERANCE ON ALL DIMENSIONS NOT SPECIFIED ON THE DRAWING TO BE IN ACCORDANCE WITH AI 2400

COUNTERSINK ALL TAPPED HOLES 118" X ONE THREAD DEEP

BREAK ALL SHARP CORNERS UNLESS OTHERWISE SPECIFIED

SURFACE FINISH SPEC ARE IN ACCORDANCE WITH GM ENGR STDS

THIRD ANGLE PROJECTION

1706 274

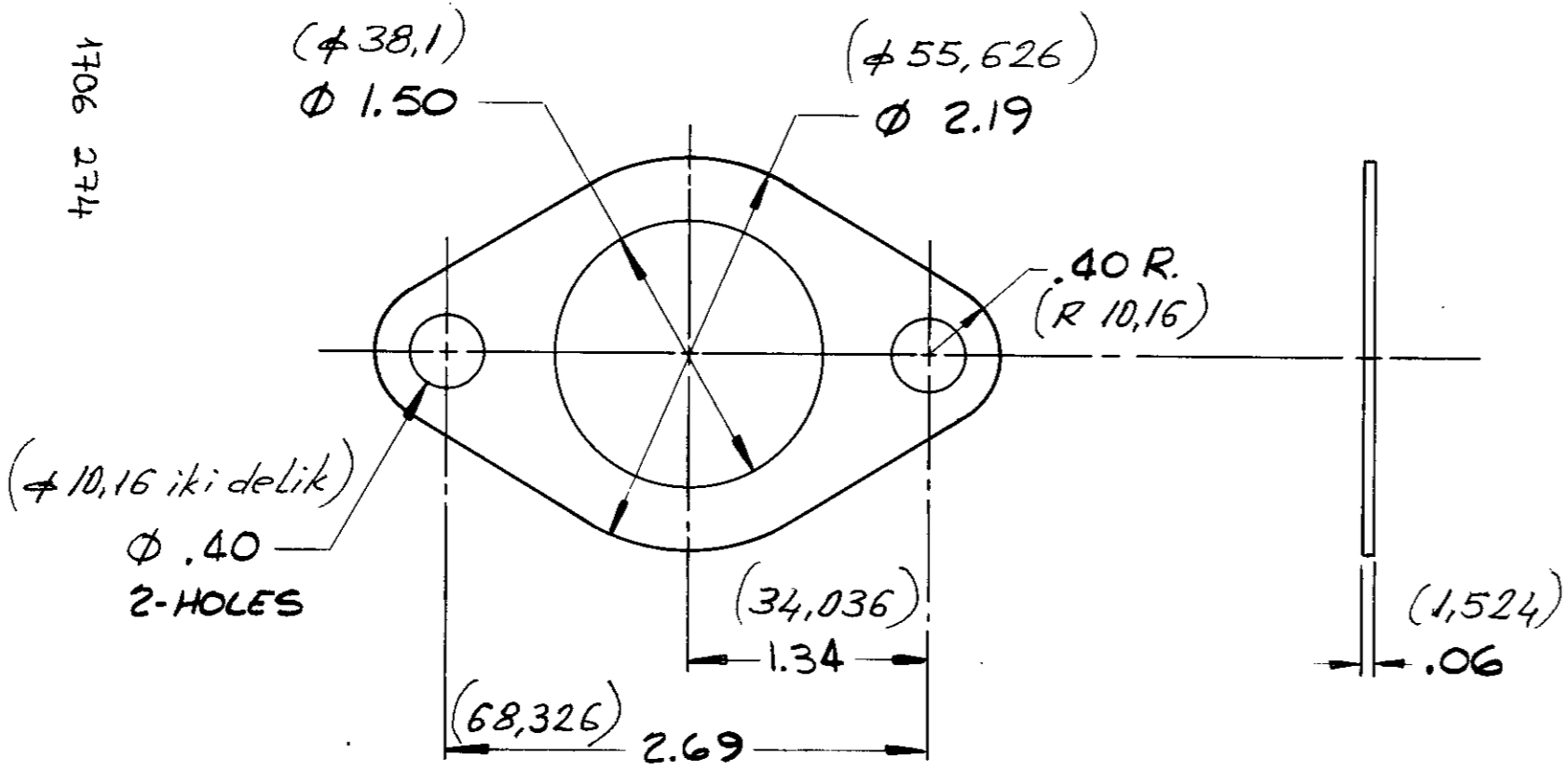

RECORDED

NO REQD	MATERIAL/NOTES	NAME OF PART	PART NO	ITEM NO
	MATERIAL: EMS 629	ELECTRO-MOTIVE A DIVISION OF GENERAL MOTORS CORP. LAGRANGE, ILLINOIS 60525, U.S.A.		

DR [signature]	DATE 05DE84	PART NAME: GASKET Conta	
CK			
SUP J. [signature]	5DE84	DESCRIPTION	REF 8083349
WELD	MOD ENGR S/B 7DE84	FIRST USED ON 45385	PART NO 9572321
MATL [signature]	ENGR [signature] 07DE84		

RFC NO	REV LET	REVISION	DATE	BY	APVD